GPT050ND04LND

40V N-Channel MOSFET

Product Summary

$V_{(BR)DSS}$	$R_{DS(on)TYP}$	I_D
40V	6.2mΩ@10V	50A
	8.4mΩ@4.5V	

PDFN5X6-8L

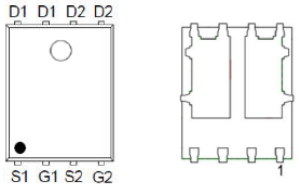

Schematic diagram

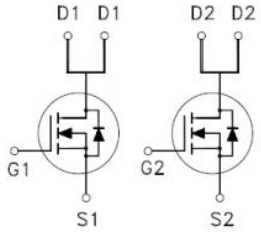

Feature

- Split Gate Trench Technology
- Low $R_{DS(ON)}$
- Low Gate Charge
- Low Gate Resistance
- 100% UIS Tested

Application

- Power Management
- Load Switching

Package Marking and Ordering Information

Part Number	Package	Marking	Packing	Reel Size	Tape Width	Qty
GPT050ND04LND	PDFN5X6-8L	T050ND04L	Reel & Tape	330mm	12mm	5000pcs

ABSOLUTE MAXIMUM RATINGS (T_A = 25°C unless otherwise noted)

Parameter		Symbol	Value	Unit
Drain-Source Voltage		V_{DS}	40	V
Gate-Source Voltage		V_{GS}	±20	V
Continuous Drain Current[1]	T_C = 25°C	I_D	50	A
	T_C = 100°C		32	
Pulsed Drain Current[2]		I_{DM}	200	A
Single Pulsed Avalanche Current[3]		I_{AS}	18	A
Single Pulsed Avalanche Energy[3]		E_{AS}	81	mJ
Power Dissipation[5]	T_C = 25°C	P_D	28	W
Thermal Resistance from Junction to Ambient[6]		$R_{\theta JA}$	60	°C/W
Thermal Resistance from Junction to Case		$R_{\theta JC}$	4.5	°C/W
Operating Junction and Storage Temperature Range		T_J, T_{STG}	-55~ +150	°C

MOSFET ELECTRICAL CHARACTERISTICS (T_A = 25°C unless otherwise noted)

Parameter	Symbol	Test Condition	Min	Type	Max	Unit
Off Characteristics						
Drain-Source Breakdown Voltage	$V_{(BR)DSS}$	V_{GS} = 0V, I_D = 250μA	40			V
Zero Gate Voltage Drain Current	I_{DSS}	V_{DS} = 40V, V_{GS} = 0V			1	μA
Gate-Body Leakage Current	I_{GSS}	V_{GS} = ±20V, V_{DS} = 0V			±100	nA
On Characteristics[4]						
Gate Threshold Voltage	$V_{GS(th)}$	V_{DS} = V_{GS}, I_D = 250μA	1	1.6	3	V
Drain-Source On-Resistance	$R_{DS(on)}$	V_{GS} = 10V, I_D = 10A		6.2	8	mΩ
		V_{GS} = 4.5V, I_D = 10A		8.4	11	
Dynamic Characteristics						
Input Capacitance	C_{iss}	V_{DS} = 20V, V_{GS} = 0V, f = 1MHz		732		pF
Output Capacitance	C_{oss}			370		
Reverse Transfer Capacitance	C_{rss}			34		
Gate Resistance	R_g	V_{DS} = 0V, V_{GS} = 0V, f = 1MHz		3		Ω
Switching Characteristics						
Total Gate Charge	Q_g	V_{DS} = 20V, V_{GS} = 10V, I_D = 10A		18		nC
Gate-Source Charge	Q_{gs}			2.1		
Gate-Drain Charge	Q_{gd}			5.6		
Turn-On Delay Time	$t_{d(on)}$	V_{DD} = 20V, V_{GS} = 10V, R_G = 1.6Ω, I_D = 20A		10		ns
Turn-On Rise Time	t_r			32		
Turn-Off Delay Time	$t_{d(off)}$			27		
Turn-Off Fall Time	t_f			12		
Source-Drain Diode Characteristics						
Diode Forward Voltage[4]	V_{SD}	V_{GS} = 0V, I_S = 10A			1.2	V

Notes:

1.The maximum current rating is limited by package. And device mounted on a large heatsink.

2.Pulse Test: Pulse Width ≤ 10μs, duty cycle ≤ 1%.

3.E_{AS} condition: V_{DD} = 20V, V_{GS} = 10V, L = 0.5mH, R_G = 25Ω Starting T_J = 25°C.

4.Pulse Test: Pulse Width ≤ 300μs, duty cycle ≤ 2%.

5.The power dissipation P_D is limited by $T_{J(MAX)}$ = 150°C. And device mounted on a large heatsink.

6.Device mounted on 1in^2 FR-4 board with 2oz. Copper, in a still air environment with T_A = 25°C.

Typical Characteristics

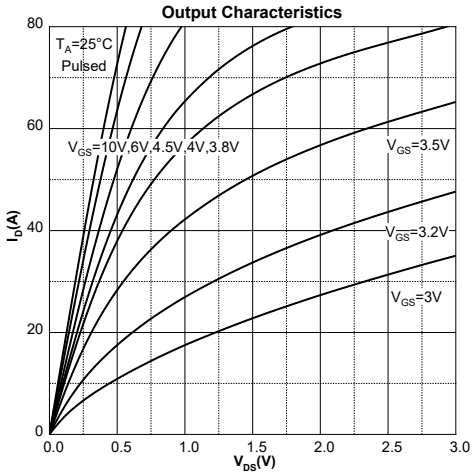

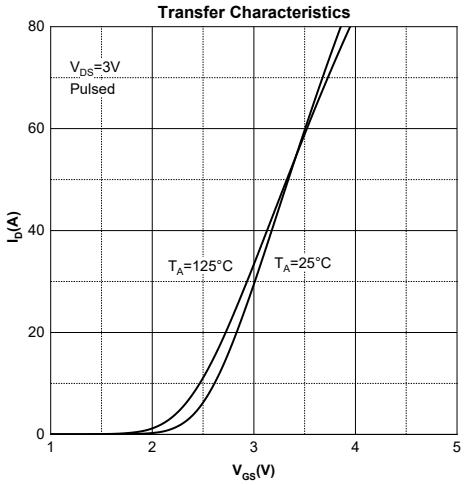

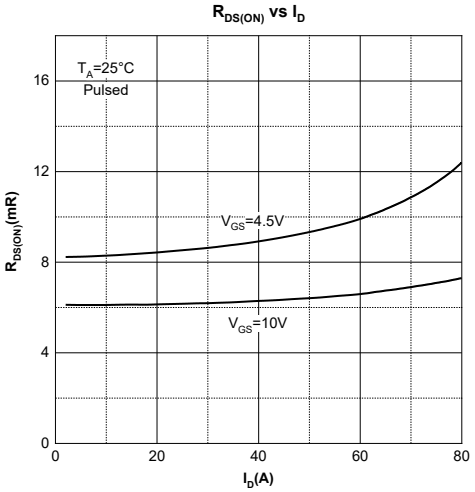

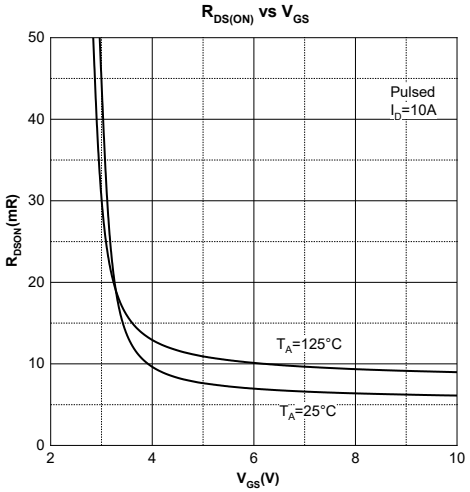

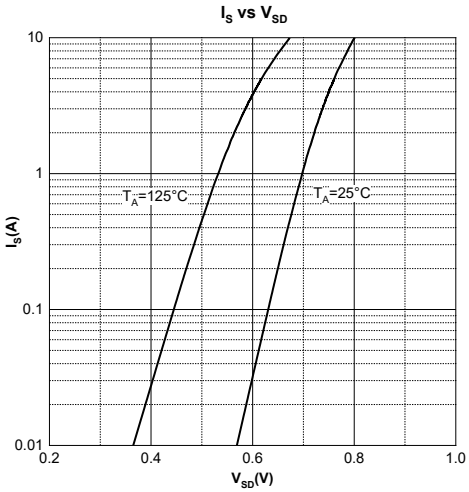

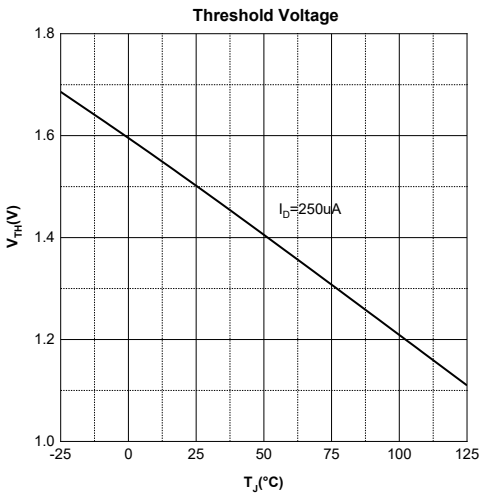

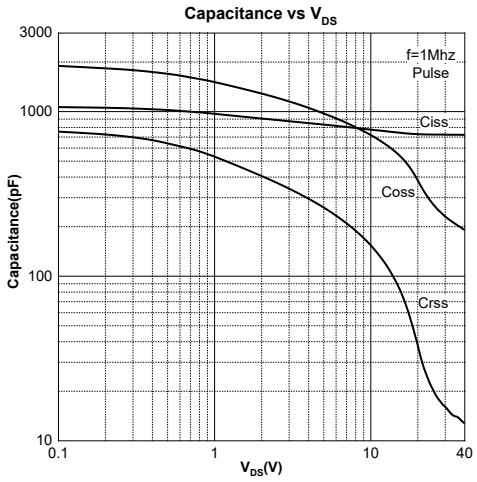
Capacitance vs V_{DS}
f=1Mhz
Pulse
Ciss
Coss
Crss
Capacitance(pF)
V_{DS}(V)
3000
1000
100
10
0.1
1
10
40

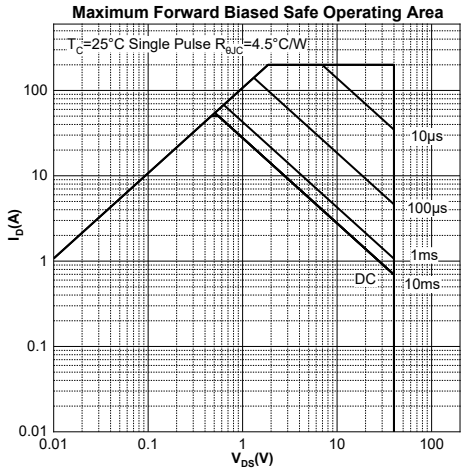
Maximum Forward Biased Safe Operating Area
T_C=25°C Single Pulse $R_{\theta JC}$=4.5°C/W
10μs
100μs
1ms
10ms
DC
I_D(A)
V_{DS}(V)
100
10
1
0.1
0.01
0.01
0.1
1
10
100

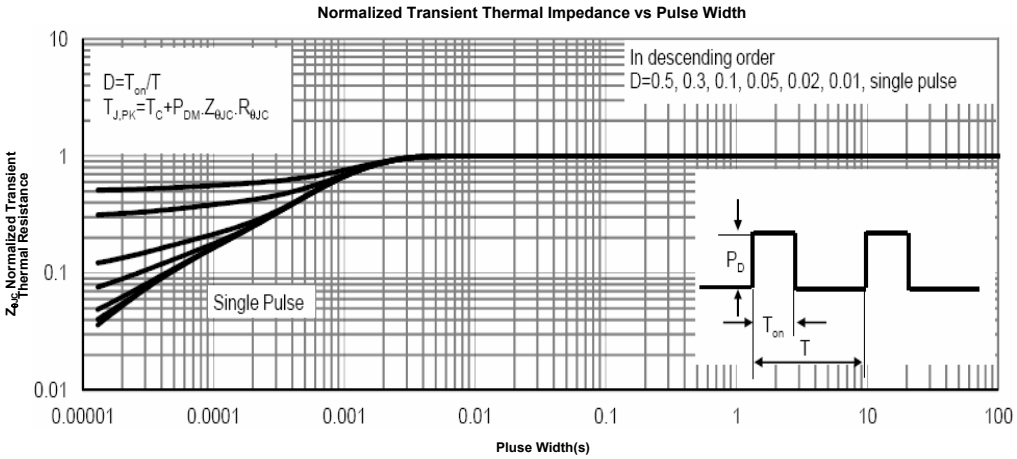
Normalized Transient Thermal Impedance vs Pulse Width
D=T_{on}/T
$T_{J,PK}$=T_C+P_{DM}.$Z_{\theta JC}$.$R_{\theta JC}$
In descending order
D=0.5, 0.3, 0.1, 0.05, 0.02, 0.01, single pulse
Single Pulse
P_D
T_{on}
T
$Z_{\theta JC}$ Normalized Transient Thermal Resistance
Pluse Width(s)
10
1
0.1
0.01
0.00001
0.0001
0.001
0.01
0.1
1
10
100

Test Circuit

Gate Charge Test Circuit & Waveform

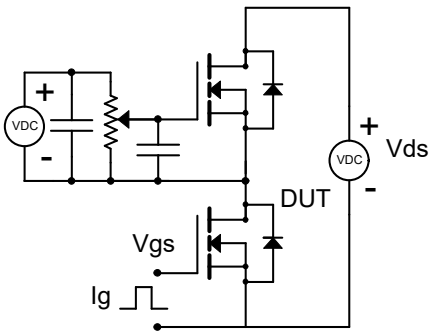

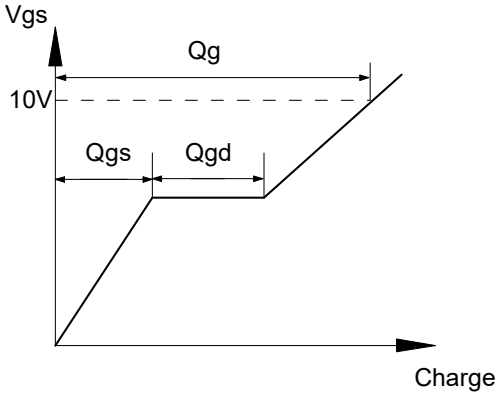

Resistive Switching Test Circuit & Waveform

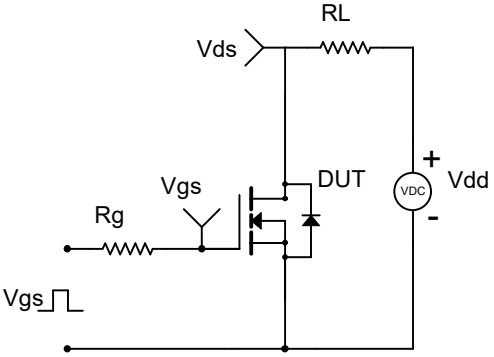

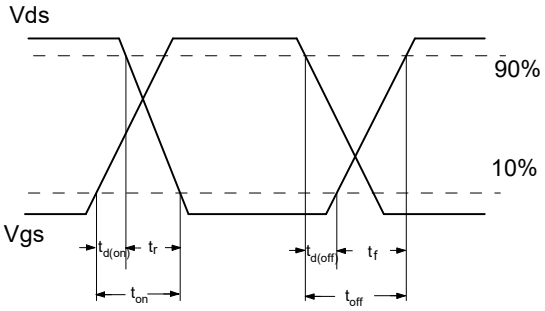

Unclamped Inductive Switching (UIS) Test Circuit & Waveforms

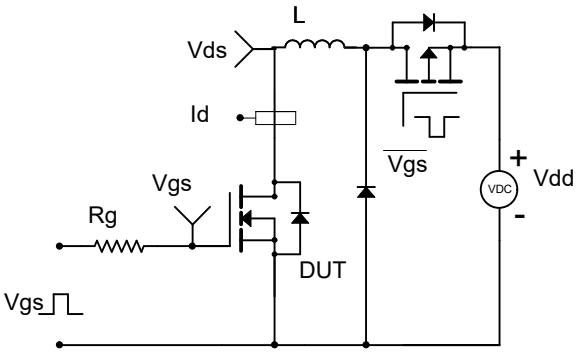

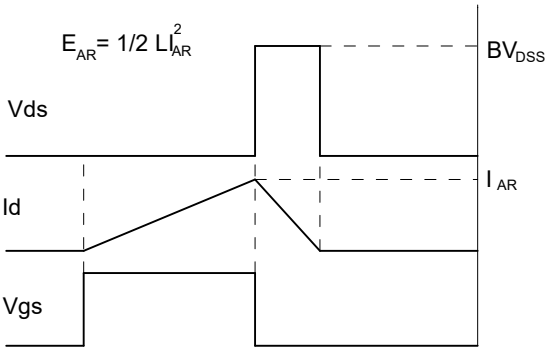

PDFN5X6-8L Package Information

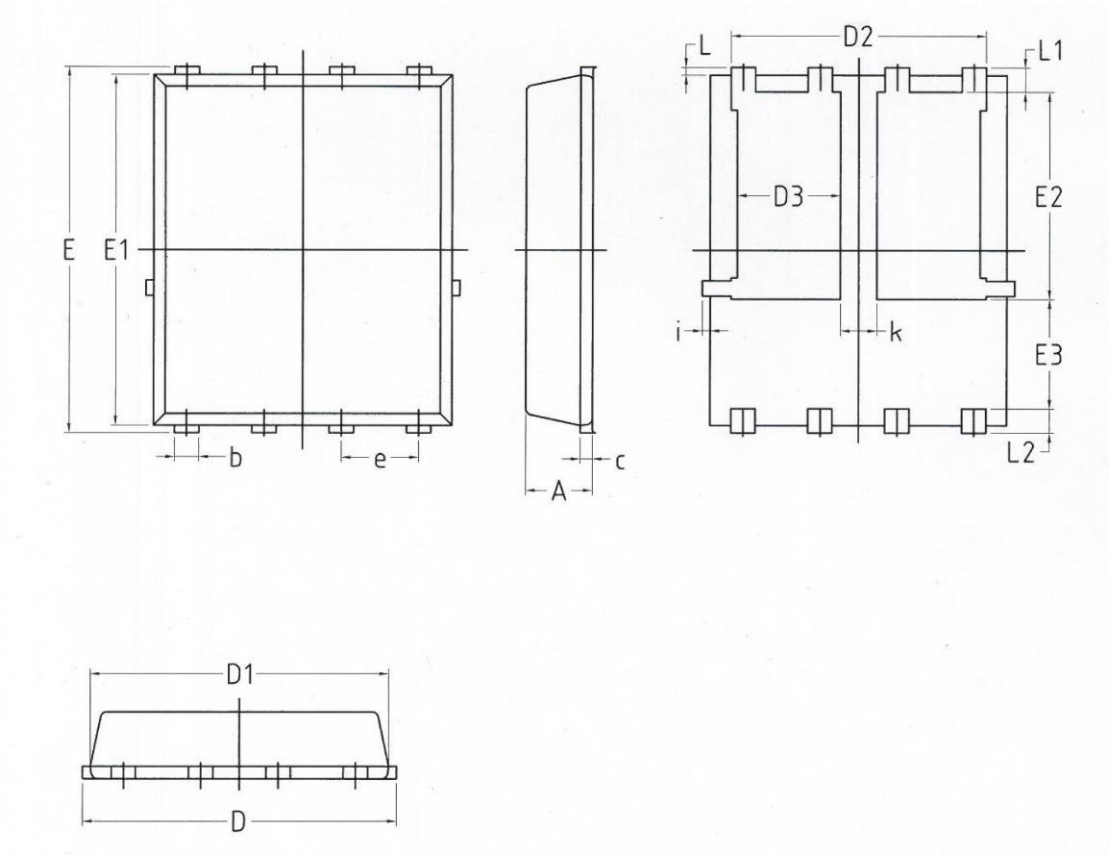

Symbol	Dimensions In Millimeters		Dimensions In Inches	
	Min.	Max.	Min.	Max.
A	0.900	1.200	0.035	0.047
b	0.340	0.500	0.013	0.020
c	0.203 BSC		0.008 BSC	
D	4.800	5.400	0.189	0.213
D1	4.800	5.000	0.189	0.197
D2	4.110	4.310	0.162	0.170
D3	1.500	1.800	0.059	0.071
E	5.950	6.350	0.234	0.250
E1	5.600	5.900	0.220	0.232
E2	3.300	3.700	0.130	0.146
E3	1.400	-	0.055	-
e	1.270 BSC		0.050 BSC	
L	0.050	0.250	0.002	0.010
L1	0.380	0.680	0.015	0.027
L2	0.380	0. 840	0.015	0.033
i	-	0.180	-	0.007
k	0.500	0.700	0.020	0.028

Attention：

- GreenPower Electronics reserves the right to improve product design function and reliability without notice.
- Any and all semiconductor products have certain probability to fail or malfunction, which may result in personal injury, death or property damage. Customer are solely responsible for providing adequate safe measures when design their systems.
- GreenPower Electronics products belong to consumer electronics or other civilian electronic products.